Model 3500

Like model 3400, but with the following differences:

- Twice the loading capacity due to doubling of the washing basket and washing chamber depth
- Double-capacity spray washing system
- Choice of one or two loading openings
- One or two lifting doors
- Inspection and maintenance flap for easy access to the back of the machine
- Rigid underframe as washing basket support
- Stainless steel drip pan on wheels, moves under the machine housing as the washing basket is pushed into the machine

Accessories

- Impression cylinder support rack
- Hose rinsing device
- Self-cleaning device
- Solvent cooler; alternatively: with thermostatic valve, water cooler or recooler
- External air extraction system
- Solvent concentration measuring and regulating system for connection to an exhaust air cleaning system

Model 3500W

Like model 3500, but with the following differences:

- Suitable for water-based washing agents
- No explosion protection, but ATEX-compliant design
- Rinsing with water which is then discharged automatically
- Heating of the water-based washing agent
- Heat-insulated washing machine housing
- Hot lye equipment

Washing machine model 3500	Size 20	Size 30
Working width / height / length mm	2000 x 500 x 2000	2000 x 500 x 3000
Washing pump capacity m³/h / kW	133 / 36	133 / 36
Internal air extraction system m³/h / kW	4000 / 2.5	4000 / 2.5
	L x W x H	L x W x H
Dimensions mm	7200 x 3600 x 3100	8200 x 3600 x 3100
Required space mm	9000 x 5300 x 3700	10000 x 5300 x 3700
Transport clearance mm	3500 x 3200 x 2100	4500 x 3600 x 2100

* Subject to technical changes
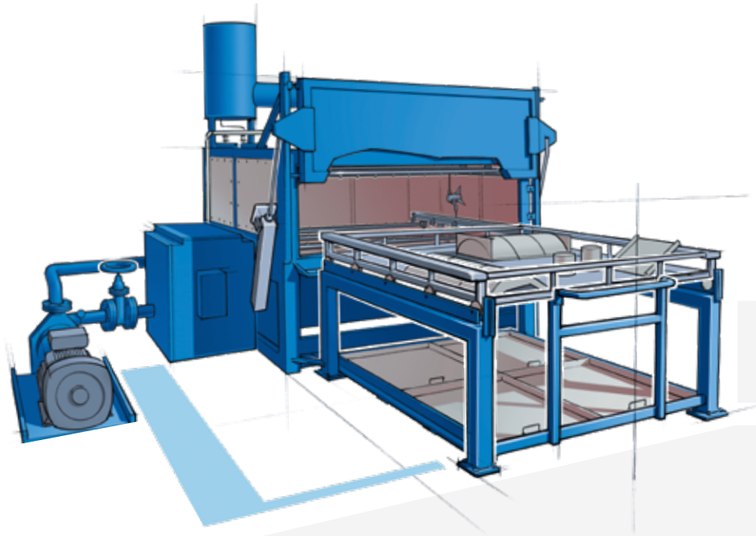
3500