D.W. RENZMANN

Washing machines for gravure cylinders, anilox rollers and sleeves

Cleaning solutions and solvent recovery.

www.dw-renzmann.de

Safety concept

D.W. RENZMANN Apparatebau GmbH

D.W.RENZMANN Apparatebau GmbH has been developing, manufacturing and selling cleaning and treatment systems for print shops and for paint and varnish producers for more than 50 years.

Our core competency is the removal of stubborn residues and the handling of the flammable organic solvents or aggressive alkaline washing agents used for this purpose.

In addition to the design, manufacturing and sale of equipment, we also offer a comprehensive portfolio of services. On request, we will:

- perform profitability calculations with regard to performance, staff requirements, and investment and operating costs, taking into account all relevant legislation, regulations and guidelines
- create technical documentation for each product
- support and implement approval procedures and draw up applications to authorities
- connect your new equipment to pre-existing exhaust air or waste water treatment systems
- provide worldwide service, including commissioning, assembly, repair and maintenance, through our expert staff

RENZMANN equipment is used all over the world and has gained an international reputation for excellent quality.

Cleaning requirements

RENZMANN develops modern cleaning processes and technologies that comply with today's increasingly restrictive environmental and occupational safety regulations and reflect the aim of sustainable environmental protection.

Cleaning methods

The residues on the soiled items are dissolved or chemically destroyed through the action of the washing agent and then removed by the mechanical force of spray or high-pressure jets. Suitable washing agents include solvents, water-based alkaline agents or special cleaners. The recommended cleaning equipment and cleaning technology is determined by the shape and quantity of the items to be washed and by the Model e of soiling. The perfect combination of washing agent and cleaning technology ensures that residues are dissolved quickly and effectively and subsequently removed from the surfaces.

Requirements for the explosion protection of solvent washing machines

The potential hazards of cleaning equipment that is operated with flammable liquids, and the required precautions, are described in EN 12921-3 "Machines for surface cleaning and pre-treatment of industrial items using liquids or vapours – Part 3: Safety of machines using flammable cleaning liquids". According to this standard, the spraying of solvent with a pressure > 0.7 bar permanently/regularly generates potentially explosive steam/air and aerosol/air mixtures corresponding to zone 0 inside the machine, regardless of the solvent's flash point.

Leaks at the washing machine and residual solvent on the washed parts may also create an explosive atmosphere outside the machine; consequently, the surroundings of the machine must be classified as zone 1 (occasional presence of an explosive atmosphere) or zone 2 (rare presence of an explosive atmosphere).

External explosion protection

The outside of Renzmann solvent washing machines meets the requirements of ATEX category 2; the machines may therefore be operated in explosion hazard zone 1.

Internal explosion protection

When the solvent is heated to a temperature above its flash point and/or when aerosols are formed through the spraying of any solvent with a pressure of more than 0.7 bar or through the rotation of the washing brush, a potentially explosive solvent vapor/air or aerosol/air mixture is generated in the washing chamber. Consequently, the interior of such solvent washing machines is classified as zone 0 according to EN 12921-3 "Safety of machines using flammable cleaning liquids" (ch. 5.6.3.3).

The concept of RENZMANN solvent washing machines:

- The interior of the machines meets the requirements of category 1 devices; the washing machines may therefore be operated with zone 0 on the inside
- Electrical and moving mechanical components on the inside are Model e-examined in accordance with ATEX

Explosion-proof solvent washing machines are subject to the following legally binding directives:

- Machinery Directive 2006/42/EC
- ATEX Directive 2014/34/EU (ATEX)
- EMC Directive 2014/30/EU (Electromagnetic Compatibility)

Compliance with these directives is documented by means of the CE mark at the machine/unit and a declaration of conformity.

RENZMANN is certified under the German Water Resources Law.

Model 150

Cleaning of gravure cylinders

- Top loader with a closed washing chamber and a separate, integrated washing solvent reservoir
- The machine can only be operated when the machine lid is closed
- Cylinder support consisting of two adjustable carriages; the carriages are equipped with powered roller pairs that support the cylinder journals; the support rollers driven by an external explosion-proof gear motor
- Individually configured washing and spray rinsing system
- Powerful unit of washing pump and explosion-proof motor
- Removable filter cartridges protect the spraying system, pumps and pipes from foreign matter
- Filling level control for the integrated solvent reservoir (operating level, max. level)
- Internal air extraction system with powerful fan and pneumatic air inlet and air admixture valves
- Automatic washing program (PLC): washing – draining – rinsing – draining – internal air extraction; the program steps can be selected individually

Accessories

- Self-cleaning device
- Automatic lid lock; alternatively: pneumatic lid
- Solvent cooler; alternatively: with thermostatic valve, water cooler or recooler
- Ambient air extraction system for the operator's workstation
- Solvent concentration measuring and regulating system for connection to an exhaust air cleaning system

Optional machine configurations

- Integration into existing rooms and cylinder logistics systems

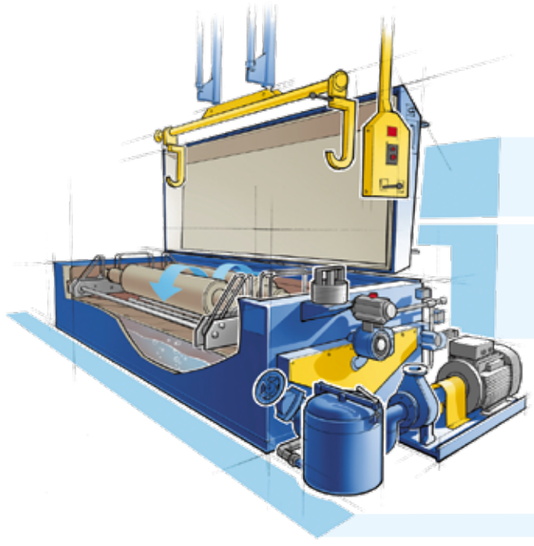

150

Washing machine model 150	Size 20	Size 30	Size 40	Size 50
Impression cylinder diameter max. mm	500	500	500	500
Impression cylinder length max. mm	2000	3000	4000	5000
Number of impression cylinders	**C1**	**C1**	**C1**	**C1**
Washing pump capacity m³/h / kW	33 / 10	50 / 12.5	66 / 15	83 / 20
Internal air extraction system m³/h / kW	2200 / 1.85	2200 / 1.85	3500 / 2.5	5000 / 3.6
	L x W x H	**L x W x H**	**L x W x H**	**L x W x H**
Dimensions mm	4300 x 1960 x 1530	5300 x 1960 x 1530	6430 x 1960 x 1530	7300 x 1960 x 1530
Required space mm	5500 x 3500 x 4000	6500 x 3500 x 4000	7500 x 3500 x 4000	8500 x 3500 x 4000
Transport clearance mm	3200 x 1900 x 1800	4200 x 1900 x 1800	5200 x 1900 x 1800	6200 x 1900 x 1800
Number of impression cylinders	**C2**	**C2**	**C2**	**C2**
Washing pump capacity m³/h / kW	66 / 15	100 / 24	133 / 36	166 / 36
Internal air extraction system m³/h / kW	2200 / 1.85	3500 / 2.5	5000 / 3.6	5000 / 3.6
	L x W x H	**L x W x H**	**L x W x H**	**L x W x H**
Dimensions mm	4300 x 2460 x 1530	5300 x 2460 x 1530	6430 x 2460 x 1530	7300 x 2460 x 1530
Required space mm	5500 x 4000 x 4000	6500 x 4000 x 4000	7500 x 4000 x 4000	8500 x 4000 x 4000
Transport clearance mm	3200 x 2400 x 1800	4200 x 2400 x 1800	5200 x 2400 x 1800	6200 x 2400 x 1800

* Subject to technical changes

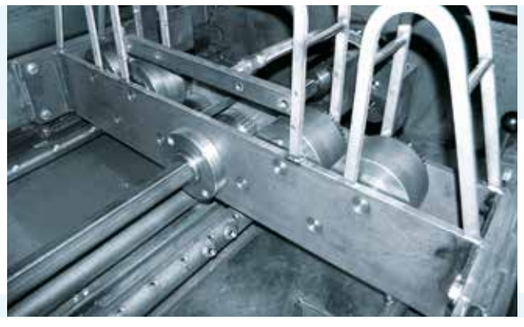

Model 360

- Front loader with closed washing chamber and separate, integrated washing solvent reservoir
- Pneumatic drawer; the machine door is also the machine front; operation is only possible when the door is closed
- Drawer with powered support rollers for the impression cylinders; the support rollers are driven by an external explosion-proof gear motor
- A stainless steel drip pan underneath the drawer moves together with the drawer to keep the floor clean
- Individually configured washing and spray rinsing system
- Powerful unit of washing pump and explosion-proof motor
- Removable filter elements protect the spraying system, pumps and pipes from foreign matter
- Filling level control for the integrated solvent reservoir (operating level, max. level)
- Internal air extraction system with a powerful fan and pneumatic air inlet and air admixture valves
- Automatic washing program (PLC): washing – draining – rinsing – draining – internal air extraction; the program steps can be selected individually

Accessories

- Self-cleaning device
- Solvent cooler; alternatively: with thermostatic valve, water cooler or recooler
- Ambient air extraction system for the operator's workstation
- Solvent concentration measuring and regulating system for connection to an exhaust air cleaning system

Optional machine configurations

- Integration into existing rooms and cylinder logistics systems
- Continuous washing machine with 2 doors
- Model 360-W for water-based/alkaline cleaning systems

Washing machine model 360	Size 03	Size 04	Size 05
Number of impression cylinders	3	4	5
Impression cylinder diameter max. mm	300	300	300
Impression cylinder length max. mm	2000	2000	2500
Washing pump capacity m³/h / kW	80 / 20	105 / 28	160 / 47
Internal air extraction system m³/h / kW	4000 / 2.5	4000 / 2.5	4000 / 2.5
Dimensions mm	5040 x 3500 x 3100	5920 x 3500 x 3100	6800 x 4200 x 3100
Required space mm	6660 x 5500 x 3700	7980 x 5500 x 3700	9300 x 6200 x 3700
Transport clearance mm	3120 x 3400 x 2000	3560 x 3400 x 2000	4000 x 3900 x 2000

* Subject to technical changes

360

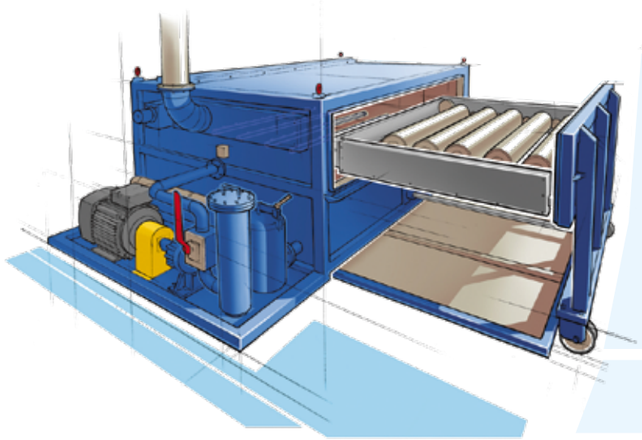

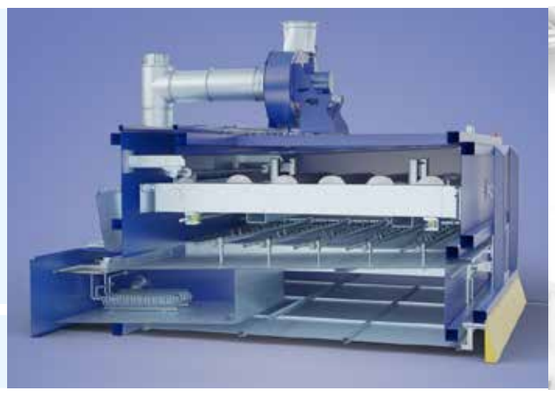

Model 365

Cleaning of hollow cylinders

The RENZMANN washing machine model 365S has been designed exclusively for simultaneous cleaning of several hollow impression cylinders. Together, the short spraying distance, high spraying pressure, and the rotation of the cylinders ensure an optimum cleaning result. The cylinder faces are additionally cleaned with brushes. The cylinders are loaded onto a hydraulic door that opens to a horizontal position in front of the machine. The cylinders are pushed onto the support shafts fastened to the door. As the door folds up by 90° to close the machine, the hollow cylinders are brought to a vertical position inside the washing chamber. This allows any residual liquid inside to drain from the cylinders.

The machine conforms to the safety requirements for solvent washing machines, explosion protection according to ATEX: category 1/2, explosion group IIB, temperature class T3, type examination no. IBExU03ATEX1125X.

Standard version

- Closed washing chamber; metal housing reinforced with a rectangular tube frame; solvent-resistant coating
- The number, length and diameter of the cylinders depend on the machine version
- Hinged door with lateral hydraulic cylinders for opening and closing; one support shaft per hollow cylinder, fastened to the rear (bottom) of the door with a sturdy tapered roller bearing and driven by a gear motor flanged to the outside of the machine; the support shafts protrude toward the loading side at the front to allow for the fitting of the hollow cylinders
- Internal solvent tank, separated from the washing chamber
- One spraying system each for washing and rinsing; compressed air controlled rinsing valve
- Filling connection with pneumatic valve
- Washing pump, 60 m liquid column; approx. 5.5 to 6 bars delivery pressure, depending on the solvent; delivery volume (m³/h) and driving power (kW) depending on the machine version (number and size of cylinders)
- Large-surface strainer baskets (removable from the outside) protect pumps, pipes and the spraying system from foreign matter
- Brushes for removal of heavy residues on the cylinder faces; the brushes are engaged and pressed against the cylinders pneumatically during cylinder rotation and disengaged before rinsing; driven by external pneumatic cylinders

Washing machine model 365	365S-4	365S-5	365S-6
Number of impression cylinders	4	5	6
Cylinder length max. mm	1600	1200	1600
Cylinder diameter mm	300	260	300
Pump P1 m³/h / kW	100 / 28	100 / 28	130 / 36

* Subject to technical changes

- Automatic washing program with the following program steps: washing – draining – rinsing – ventilating; simultaneous cylinder rotation, engagement and disengagement of the brushes for cleaning of the cylinder faces
- Explosion-proof control elements mounted directly at the machine: washing program ON/OFF, EMERGENCY STOP, washing time selection (SHORT/LONG), OPEN/CLOSE door, signal lamps
- Control cabinet with programmable logic controller (PLC) for installation outside the hazard area; display for text in the control cabinet door; input and/or display of the duration of the individual program steps
- Separate control box for the pneumatic system (maintenance of pneumatic elements can be performed without opening the control cabinet; electric components are not exposed to damp compressed air)

365

Model HA

Cleaning of screen rollers and gravure cylinders

- Top loader with closed stainless steel washing chamber
- Stainless steel machine lid; operation is only possible when the lid is closed; the machine cannot be opened until the washing program is complete
- Roller rotating and support device consisting of a pair of stainless steel shafts with bearings at the faces of the machine; the shafts are driven by an external gear motor
- The parts need not be positioning exactly in the machine; the device can be adjusted easily to different roller/cylinder lengths
- A washing agent system sprays soiled surfaces evenly with alkaline washing agent
- Washing agent system containing of a stainless steel washing agent container under the washing chamber, a circulating pump and a spray pipe system
- The washing agent container includes a flow-type heater (temperature up to 60 °C), filling level control (operating level, max. level) and large-surface, removable fine strainers
- High-pressure system for precise spraying of the roller/cylinder surfaces pre-treated with washing agent
- The high-pressure system consists of a high-pressure reciprocating pump (100 bars) connected to the on-site water supply system, and a carriage with a high-pressure flat jet nozzle (adjustable travel) that oscillates horizontally
- A blow-off device moving horizontally on a carriage removes residual water from the roller/cylinder surfaces
- Control system (PLC) including control elements and signal lamps in a control box mounted to the washing chamber; automatic washing program: spraying with washing agent – draining – high-pressure rinsing – blowing off with compressed air; all process steps are executed while the rollers/cylinders are rotating

Accessories

- Separate water circuit for the high-pressure system; warm water is stored in a second, separate stainless steel high-pressure container under the washing chamber; the warm water is used to rinse off the washing agent under high pressure, thereby improving the cleaning result and reducing water consumption
- Water container for the high-pressure pump including an immersion heater (temperature up to 60 °C), filling level control (operating level, max. level) and large-surface, removable fine strainers
- Stainless steel high-pressure pump
- Rinsing with water (only in combination with a water circuit); includes a separate stainless steel rinsing pipe, heat exchange tube and stainless steel connecting pipes
- The machine containers are drained by a diaphragm pump

HA

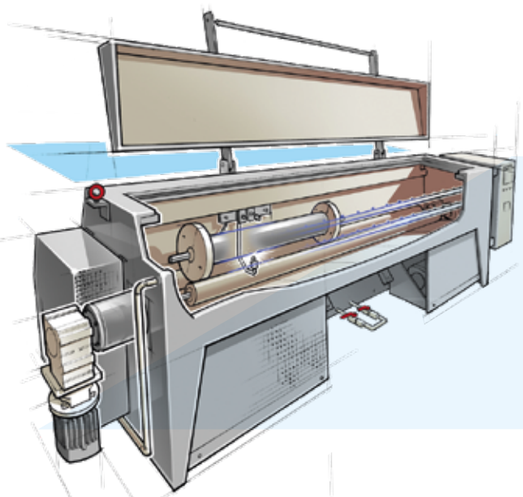

Washing machine model HA	Size 15	Size 20	Size 25
Number of rollers / sleeves / cylinders	1	1	1
Diameter max. mm	250	250	250
Weight max. kg	380	380	380
Length roller / cylinder max. mm	1500	2000	2500
Length sleeve max. mm	1200	1700	2200 or 2x each 900
Capacity of high-pressure pump P2 kW / l/min	3 / 10	3 / 10	3 / 10
Heating capacity kW	2	4	4
	L x W x H	L x W x H	L x W x H
Dimensions mm	2870 x 1000 x 1300	3370 x 1000 x 1300	3870 x 1000 x 1300
Required space mm	4200 x 2800 x 1900	4200 x 2800 x 1900	4200 x 2800 x 1900
Transport clearance mm	3000 x 1800 x 1800	3500 x 1800 x 1800	4000 x 1800 x 1800

* Subject to technical changes

Model HA-S

Cleaning of screen rollers and gravure cylinders

Like model HA, but with the following differences:

- Rotating device for rollers/cylinders consisting of two journal supports with powered roller pairs; one journal support can be adjusted to different roller/cylinder lengths; sleeves can be supported on cover/journal disks
- 2 high-pressure nozzles on carriages and double the high-pressure pump capacity, double carriage speed, hence half the time/cylinder length for high-pressure cleaning
- Larger washing agent container

Measures and devices for a safe operation of the system

- The machine meets the requirements of all relevant EC safety directives. This is certified with a declaration of conformity and documented by means of a CE label at the machine
- All parts of the machine that come into contact with the washing agent are resistant to this agent
- Filters protect pumps, pipes, and spray nozzles from foreign matter
- Spraying in the machine is only possible after an automatic position control has signaled that the lid is closed and locked
- Level switches prevent the pumps and heating elements from running dry

Washing machine model HA-S	Size 20	Size 25	Size 30	Size 35	Size 40
Diameter max. mm	300	350	350	400	400
Weight max. kg	700	1000	1000	1500	1500
Length roller / cylinder max. mm	2000	2500	3000	3500	4000
Length sleeve max. mm	1700	2200	2700	3200	3700
Number of rollers / sleeves / cylinders	**C1**	**C1**	**C1**	**C1**	**C1**
Capacity of the high-pressure pump kW / l/min	3 / 10	3 / 10	5.5 / 20	5.5 / 20	5.5 / 20
Heating capacity kW	4	6	6	8	8

* Subject to technical changes

Sleeve Washer

Cleaning of printing sleeves

- Machine frame made of an aluminum section system. Protective enclosure consisting of 2 pneumatic lifting doors with 4 mm tempered safety glass and 2 fixed side walls
- Revolving magazine with 5 jointly driven sleeve supports and 5 spring-loaded sleeve supports
- The magazine is rotated in increments of 72 degrees by a three-phase AC gear motor; in automatic mode, the motor rotates the revolving magazine to the washing position; to load sleeves into the machine, the operator can select any position of the revolving magazine via a foot switch
- The washing system consists of a washing agent circulation system and a motor-driven washing brush (strip brush) that is thrown onto the sleeve during the automatic washing process and executes a regular horizontal stroke by means of a short-stroke cylinder
- The washing agent circulation system consists of a separate stainless steel container with integrated filter, a low-pressure pump (in manual mode, the pump can be used to evacuate the dirty washing agent) and a nozzle tube that sprays the washing agent on the sleeves
- Control system (PLC) including control elements and signal lamps in a control box mounted to the machine frame

Accessories

- Rinsing system consisting of a separate stainless steel container, a low-pressure pump (in manual mode, the pump can be used to evacuate the dirty washing agent) and a nozzle tube that sprays water on the sleeves
- Secondary cleaning system (only in combination with the rinsing system) consisting of a 2nd washing brush
- The washing chamber is lighted to allow the operator to observe the washing process

Measures and devices for a safe operation of the system

- The machine meets the requirements of all relevant EC safety directives. This is certified with a declaration of conformity and documented by means of a CE label at the machine
- All parts of the machine that come into contact with the washing agent are resistant to this agent
- Filters protect pumps, pipes, and spray nozzles from foreign matter
- Spraying in the machine is only possible after an automatic position control has signaled that the lid is closed and locked
- Level switches prevent the pumps and heating elements from running dry

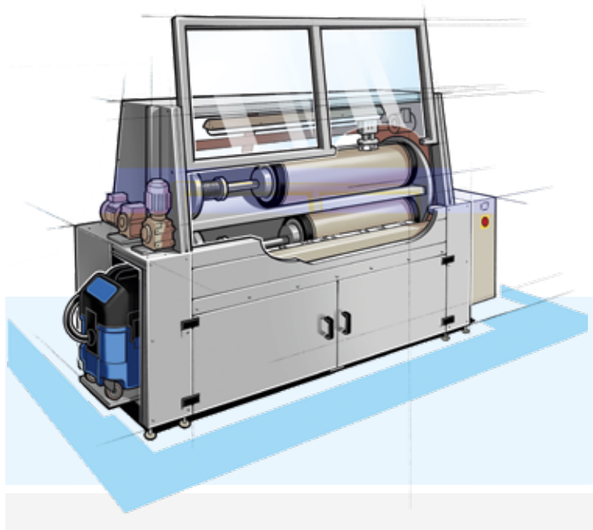

Washing machine model Sleeve Washer	Size 01	Size 02
Number of sleeves	5	5
Inside sleeve diameter mm	70 – 146.6	146.6 – 292
Outside sleeve diameter mm	bis 170	bis 305
Sleeve length mm	300 – 1400	1040 – 2000
	L x W x H	L x W x H
Dimensions mm	2850 x 1100 x 2315	3450 x 1300 x 2415
Required space mm	4500 x 3400 x 2315	5100 x 3600 x 2415
Transport clearance mm	3200 x 1300 x 2000	3800 x 1500 x 2000

* Subject to technical changes

Sleeve Washer

RENZMANN cleaning concepts for gravure cylinders

Cleaning methods for gravure cylinders

RENZMANN has been building washing machines that clean press parts and gravure cylinders for nearly 50 years. The machines use both solvents and water-based, alkaline cleaners.

Most of the machine models were developed in response to specific requirements of our customers. Machines that were requested and ordered repeatedly have become part of RENZMANN's standard product range. Based on decades of experience with both standard machines and unique customized solutions, RENZMANN is able to offer washing systems that are tailored to each customer's needs.

Gravure cylinders can be cleaned with a number of different washing machines. The first important step is to choose the right cleaning method.

The common feature of all cylinder washing machines is the fact that the cylinders are rotated in a closed washing chamber and sprayed with washing agent from all sides. The machines use a large quantity of washing agent to achieve a good cleaning effect, which is why the washing agent should be reused. Cleaning may also involve brushes, usually made of polyamide. At the end of the cleaning cycle, the circulated washing agent and the washed-off residues must be rinsed off.

The washing agent may be either an organic solvent or a water-based, alkaline agent. The most important factor in the choice of a washing agent is the cleaning result that can be achieved. If there is no reliable data on cleaning results in the desired application, we highly recommend performing a series of cleaning tests before deciding on a washing agent.

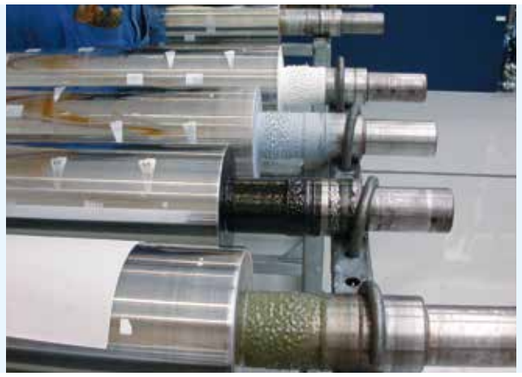

Integration into existing rooms and cylinder logistics systems

Special installation options for impression cylinder washing machines

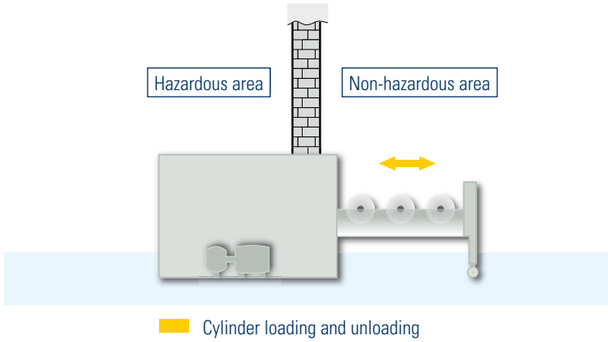

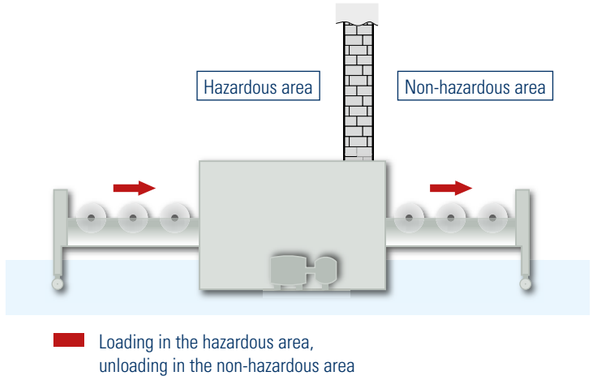

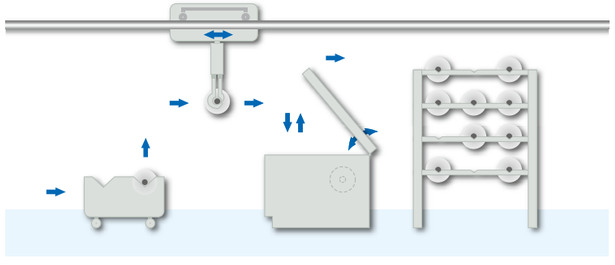

Integration of the RENZMANN impression cylinder washing machine in fully automated cylinder production lines and cylinder storage/logistics centers

Our Services

What can you expect from RENZMANN?

In the planning phase

We work with you to define the steps and responsibilities of the project and to determine what, if anything, needs to be done to prepare your premises for the installation of the equipment. During the quotation stage, we will already create process diagrams and installation plans and define the interfaces to on-site energy supply systems (power, compressed air, steam from an on-site system, thermal oil) and to waste water and exhaust air systems.

We determine the profitability of your project in terms of performance, staff requirements, investment and operating costs, taking into account all relevant laws, regulations and guidelines.

The RENZMANN laboratory offers the possibility of testing all cleaning processes used by RENZMANN with original washing machines and original items to be washed under realistic conditions. Our customers can evaluate the test results achieved with various washing machine models and cleaning processes. These test results, which are painstakingly documented in writing and with photos, form the basis of the cleaning qualities that RENZMANN warrants in the purchase contract.

Customers are also invited to observe the treatment of contaminated washing solvent in distillation units.

We will not only support you in choosing the best cleaning process for your requirements; we will also draw up a detailed plan for the installation of your new washing machine or washing system (which may include several washing machines, a distillation unit, containers, pumps, fittings etc.) in the rooms provided and for its connection to the on-site energy supply, exhaust air and waste water removal systems.

And of course you can also rely on our support in your dealings with authorities, architects and advisers, and in drawing up approval documents.

After you place your order

In addition to the documents you have already received, we will provide you with the piping diagrams, pneumatic plans and circuit diagrams for your future equipment.

To ensure a smooth assembly and commissioning of your new equipment, our sales and service staff will help you draw up appropriate plans and supply checklists.

After your new equipment is delivered

We take service literally – we want to serve our customers. Our top priority is to ensure smooth proceedings on your premises. To eliminate potential problems from the start, we offer to have our staff check the conditions on site and determine the possibilities of connecting our products to existing equipment.

Our technicians are highly trained and experienced professionals. They assemble, commission, repair and service our equipment around the globe. All our technicians undergo regular training and requalification in line with the relevant regulations.

Once the equipment has been commissioned, we will train your staff in the operation of the new machines.

If you ever need spare parts, we will do our utmost to ensure that you receive the required components as quickly as possible.

And after that?

Once your equipment has been put into operation, our staff is still available to answer any questions that might come up.

We offer regular maintenance for our products, with special focus on explosion protection, and will also perform the recurrence inspection that is required by law. We will also be happy to undertake any necessary repairs. You will receive documents certifying the recurrence inspection and the perfect working order of your equipment. This certificate is part of your explosion protection document and proves that you have fulfilled your responsibilities regarding maintenance and monitoring. And as an added bonus, you will keep your equipment in top condition. Compliance with this legal requirement increases the safety of your staff and prevents conflicts with supervisory authorities.

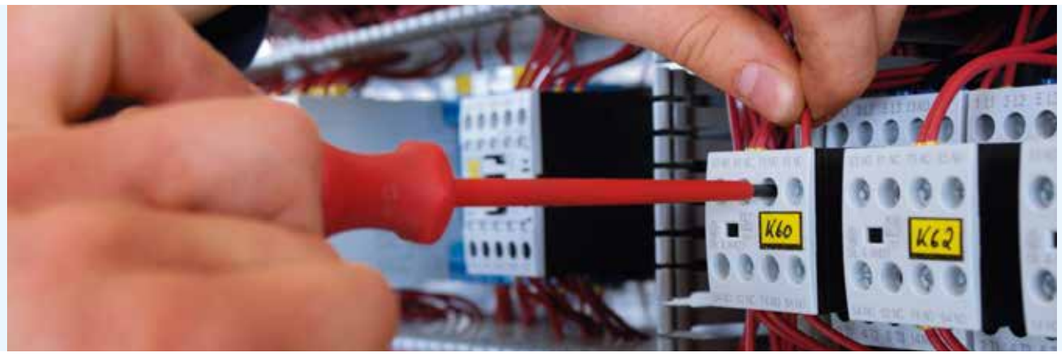

D.W. RENZMANN

D.W. Renzmann Apparatebau GmbH

Industriestraße 1 | D-55569 Monzingen
Germany

Phone: +49 (0)6751 878-0
Fax: +49 (0)6751 878-111

www.dw-renzmann.de | info@dw-renzmann.de

RIOBEER AG Cleaning Solutions

Schützenmattweg 33 | CH-5610 Wohlen
Switzerland

Phone: +41 (0)56 6186464
Fax: +41 (0)56 6186418

www.riobeer.ch | info@riobeer.ch